AZZURRA - Universal preassembled bracket **for wall hung bidet**

PATENT

APPLICATION

Wall hung bidet fastening and installation on **masonry.**

FEATUREAS AND BENEFITS

> **Exclusive patent:** suitable to fasten any kind of joint, including drop elbows.
> **Preassembled** for a fast installation.
> **The plate - vertically adjustable -** is set at the best height for most of the bathroom fixtures sold in the marketplace.
> **Compact:** it only takes 33,5 mm of space and it can be installed in 8 cm thick walls, without breaking both walls.
> **Solid**: complete with double cross plate and strategic supports to make it even more reliable.
> **Multiple ways** in which it is possible to install elbows and joints.
> Provided with **insulated pipe clamp**.
> **Epoxy coated** to ensure a good resistance to high temperatures, chemical components and corrosion.

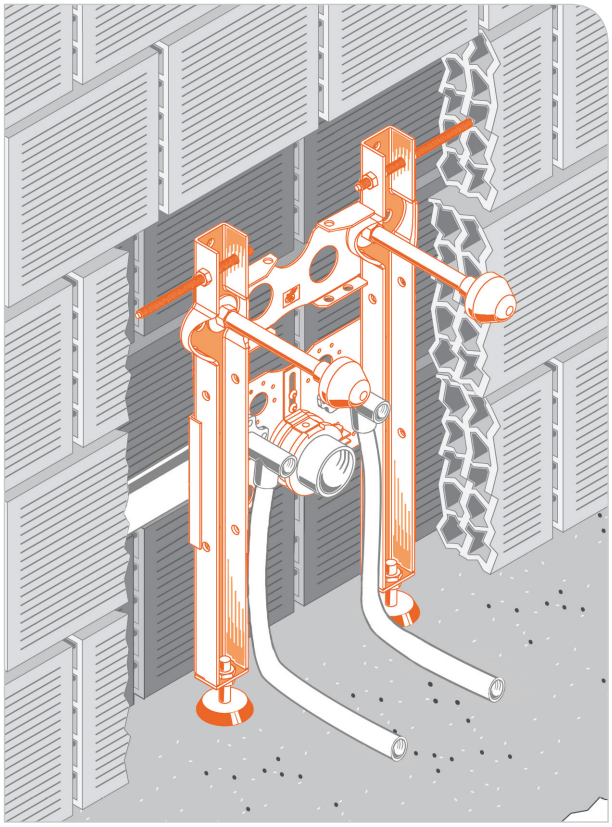

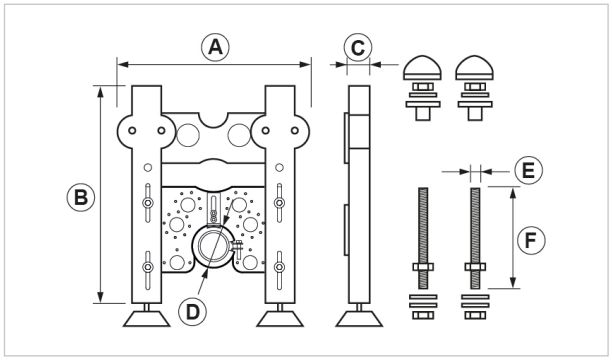

COD	TYPE	A	B	C	D	E	F
020513	AZZURRA	280	462	33,5	50	M12	180

SANITARY FIXING
WALL HUNG WC AND BIDET FASTENING

MATERIALS TECHNICAL DATA

BRACKET

Carbon steel DD11 EN 10111 with light blue epoxy coating

COMPONENTS

Carbon steel 4.8 EN ISO 898.1 with electro zinc-plating 7-8 µm

WASHERS

White Nylon PA6

CAPS

PE Polyethylene

BASE MATERIAL

Masonry and hollow brick

INSTALLATION

In order to install the product properly, please follow the instructions included in the box. They also include the dimensions needed to set more than 300 kinds of sanitary fixtures of the major producing companies.

PACKAGING

In cardboard box | 1 item

RELATED ITEMS

> PSS - Floor support
> PRO - Bracket extension
> SIN 180-230 - Kit for hole centre to centre distance
> PO - Spare brass extension kit
> CAP - fixing kit

DATE 10-2019 REV. 00

The current technical data sheet substitutes and cancels the previous ones. Information correspond with our current knowledge of the product. It cannot lead us to any sort of responsibility or compensation.
Gia S.p.A. reserves the right of changing techical features and molds without notice.

Gia S.p.A. – Via Sac. A. Cremona, 12 – 28069 Trecate (NO) – www.gia.it