RR
Heavy duty pipes roller support

APPLICATION

Pipes fixing with sliding support to compensate for system's expansion.

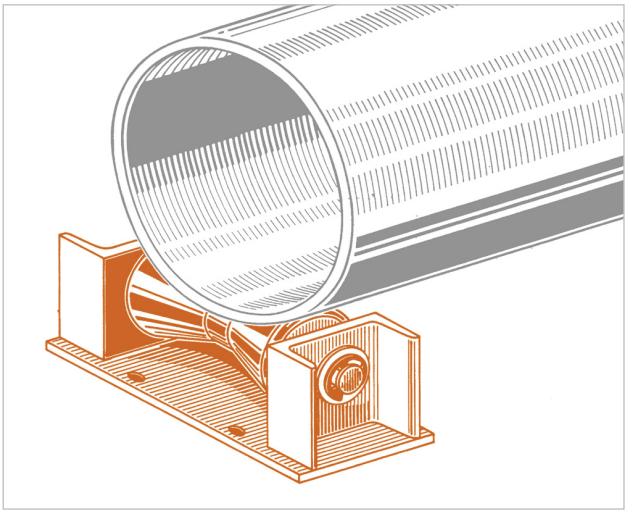

FEATURES AND BENEFITS

> It is suitable for guiding pipes while absorbing their axial espansion. **It can be set crosswise - either horizontally or vertically -** to the pipe.
> **It helps to reduce friction** when the pipe is resting on the support.

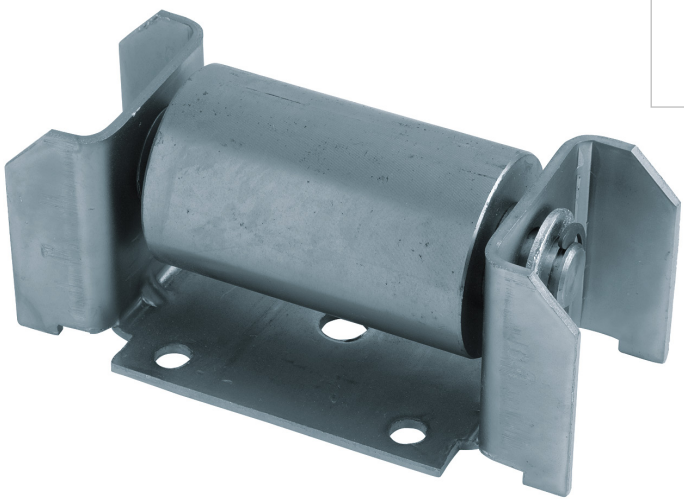

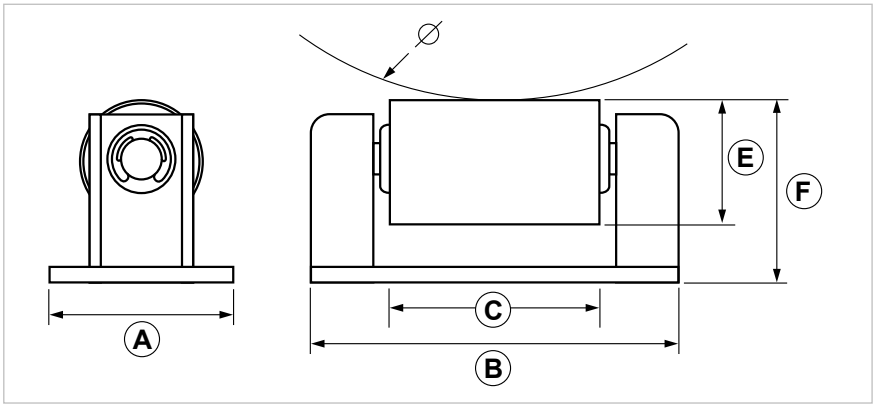

COD	Type	For pipes Ø mm	Fixing holes	A	B	C	E	F
165730	**RR 1**	50-150	n°4x8 n°1x10,5	71	142	81	48	62
165731	**RR 2**	100-300	n°2x12	70	180	110	68	92
165732	**RR 3**	200-500	n°2x12	90	245	145	88	114

PIPES' LINEAR EXPANSION

According to the temperature leap (Δt°C) pipes are subject to linear lengthening.
This extension changes according to the material of which the pipe is made.

MAIN COEFFICIENTS OF LINEAR EXPANSION FOR THE MOST USED PIPES

	MATERIAL	mm/mK
PLASTIC PIPES	PE	0,2000
	PP	0,1500
	PVDF	0,1200
	PVC	0,0700
	PE-HD	0,0260
STEEL PIPES	STAINLESS STEEL	0,0169
	COPPER (Cu)	0,0170
	STEEL (Fe)	0,0123

FORMULA TO CALCULATE PIPE'S LENGTHENING

$$\Delta_L = L_0 * (T_2 - T_1) * \lambda$$

Where:

- Δ_L is the lengthening in mm
- L_0 is the initial lengthening in m
- T_2 is the final temperature (see note)
- T_1 is the initial temperature (see note)
- λ is the expansion coefficient in mm/mK

Note: as it is a temperature variation (Δt=T2-T1) there is no need to use K (kelvin), while °C (celsius degrees) can be used as well.

The following charts display the extensions (Δ L.mm) that might affect different kinds of pipes, 1 mt long.
The temperature range (Δt°C) fall within 0°C and 70°C.

PLASTIC PIPES EXPANSION

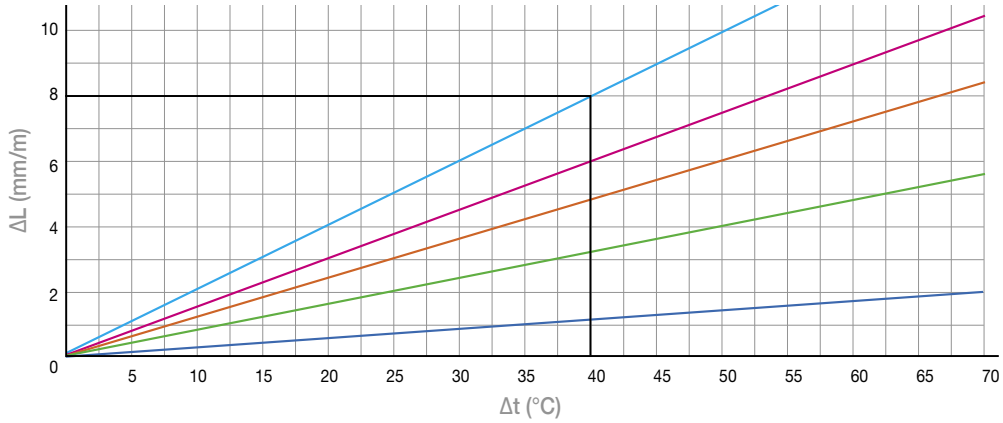

Example: PE pipes – temperature leap Δt 40 °C – 8mm lengthening – For 5 mt long pipe (8x5) 40 mm.

IRON (FE), STAINLESS STEEL AND COPPER PIPES EXPANSION

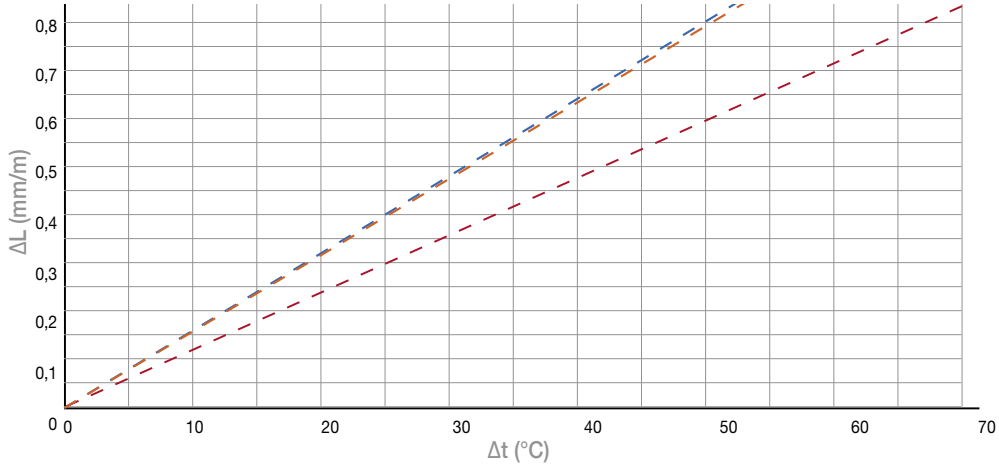

MATERIALS TECHNICAL DATA

ROLLER

Galvanized carbon steel EN 10027 zincato

PIN

Stainless steel AISI 304 - EN 10088

SOCKET

Self-lubricant

RECOMMENDED LOADS

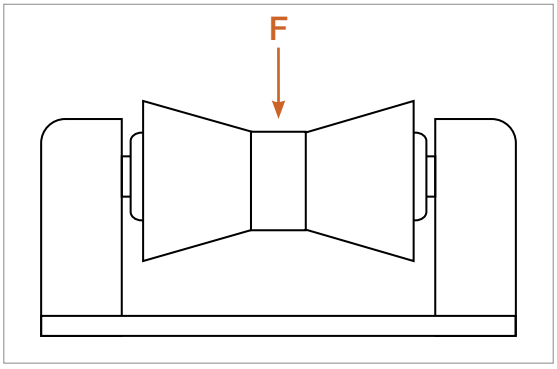

TYPE	F
RR 1	1000
RR 2	2000
RR 3	3200

Recommended load is the average resistance load with a safety coefficient.

Data are expressed in daN

1 daN=1 kg

INSTALLATION TOOLS AND RECOMMENDATIONS

Roller supports are connected to the main supporting structure via welding. In case of pipes with wide diameter and narrow thickness - in order to avoid pipe deformation when leaning on the rollers - it is recommended to install the supports at small distance from one another.

PACKAGING

In cardboard box

DATE 07-2023 REV. 01

Gia S.p.A. – Via Sac. A. Cremona, 12 – 28069 Trecate (NO) – www.gia.it